Safety without Compromise
for Temperature Regulation Applications

Plastic processing companies rely on particularly robust and sturdy couplings and fittings. The reason: They are used to cool and heat moulding units during injection moulding or pressure casting and have to withstand extreme temperatures.

The sophisticated TempTec by LÜDECKE® quick connect couplings guarantee first-class quality, full reliability and are easy and fast to operate.

In particular, we would like to point out our TempSecure by LÜDECKE® series which offers simple and effective protection against unintentional disconnection under pressure.

Advantages:

- High-class material
- Robust, safe and reliable
- Completely leakage-proof and durable
- Easy to couple
- Various sizes, connection and valve types
- Particularly safe and flexible solutions for temperature regulation applications

Broad Range

The LÜDECKE product range contains a large selection of European and International plug profiles. They cover the world's most common plug profiles and ensure high compatibility.

If there is no coupling system in our product range which meets your requirements, we will be pleased to develop an individual solution with you.

Valve Designs

The **LÜDECKE** quick connect couplings for temperature regulation applications are available in different valve designs.

Straight-Through

- No valve - neither within the coupling nor within the plug
- Maximum flow rate
- During disconnection: media will leak from the coupling and plug line

Single Shut-off

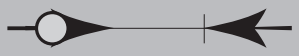

- Straight-through plug
- Coupling with valve
- During disconnection: media might leak from the plug line

Double Shut-off

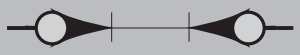

- Valves on both sides (male/female)
- During disconnection: media will stay in the hose of both connection lines, constant pressure is maintained

Materials

LÜDECKE only works with premium materials which are customised to the application.

Brass (plain/ nickel-plated)

Most of the **LÜDECKE** quick connect couplings consist of brass MS 58 (machining brass). It is a very sturdy material which guarantees high durability and is perfectly suited for galvanization (nickel, chrome).

Stainless Steel

For clean-room applications or when aggressive media are used to cool down or heat up moulding units, we recommend quick connect couplings made of stainless steel (1.4305).
For further information, please refer to our program for the processing industry.

High Resistant Special Brass

This innovative material combines the processing features of brass and the solidity of stainless steel. High resistant special brass contains no toxic additives nor lead and maintains its natural shine. This material is mainly used in the TempSecure by **LÜDECKE**® Series.

Seals

For temperature regulation applications **LÜDECKE** offers high-performance seals made of FKM. They are characterized by great heat resistance, perfect gliding properties, minimum wear as well as high elasticity and high abrasion resistance which guarantee significantly longer life times of couplings. Depending on the requirement, special high-performance seals made of FKM, EPDM and FFKM are used.

Connecting within Seconds

The **LÜDECKE** temperature regulation quick connect couplings are extremely easy to handle.

One-hand operation: To connect, simply push the plug into the coupling.

To disconnect, pull back the sleeve from the coupling (comes with automatic locking mechanism in shut-off couplings).

Flow Chart

The flow rates of the different coupling systems are summarized in the following chart.

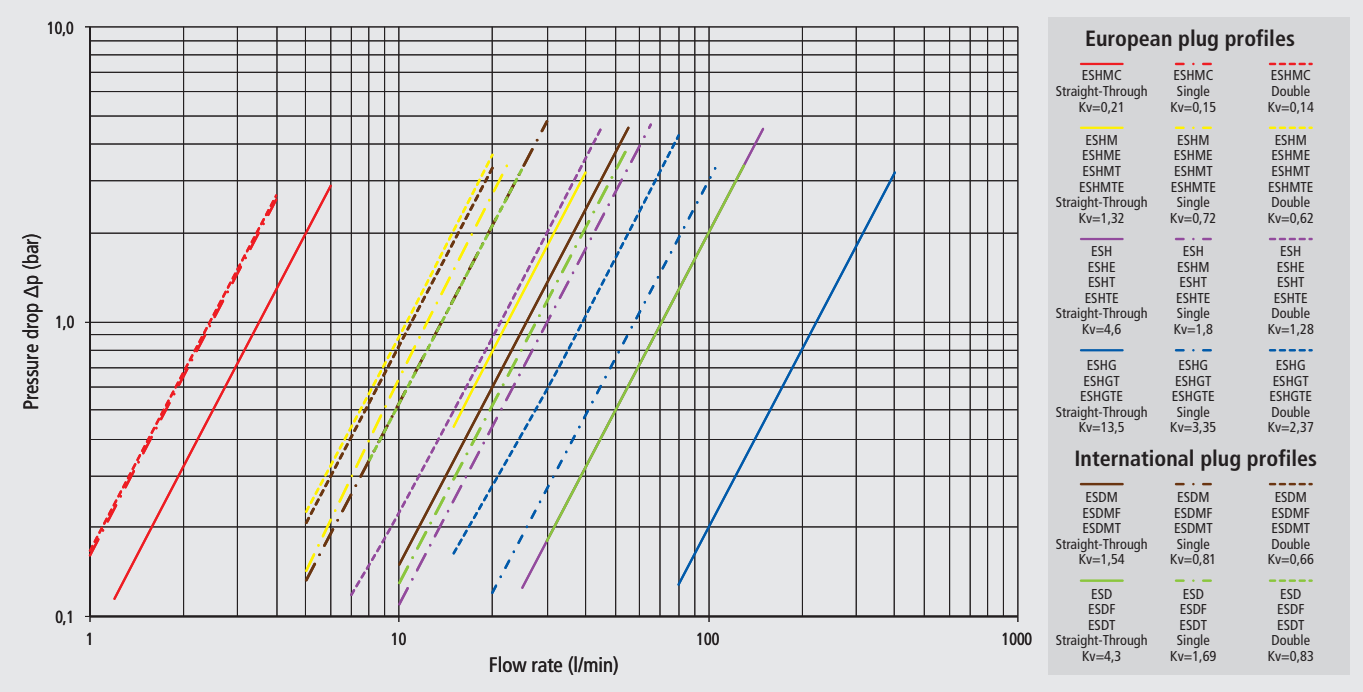

Recommendations when Selecting a Coupling System

As temperature applications pose a specific safety risk, please adhere to the following:

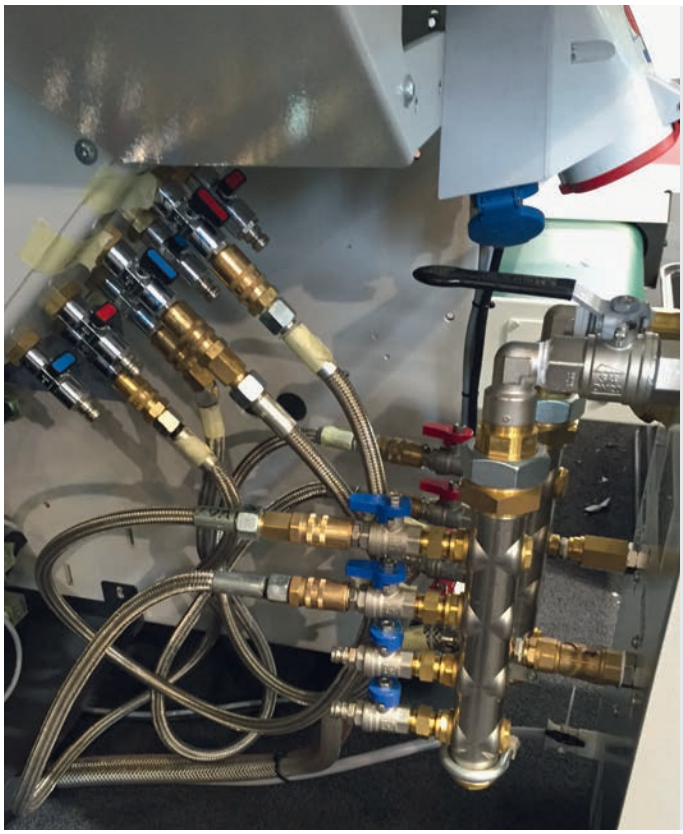

- For permanent operation with more than 160°C, an exact specification of the coupling should be determined (Seals, page 145)
- The **LÜDECKE** temperature regulation quick connect couplings can be differentiated based on some characteristics:
  - Difference between fine metric threads acc. to DIN 13 and threads acc. to ISO 228 is, that all ISO 228 threads have a turned collar
  - The brass plugs with inch threads are made of nickel-plated brass, brass plugs with metric threads are made of plain brass
  - The sleeves of straight-through couplings are made of nickel-plated brass
  - Colour coding system for distinction between flow and return (page 189)
- Couplings with extended sleeves can be easily connected and disconnected with countersunk plugs in the mould
- All shut-off couplings are suitable for connection with shut-off plugs
- All couplings can be used via one-hand operation - The Series ESDMF and ESDF couplers have a flat sealing ring on the front end and can be used via two-hand operation

Flexible Components

The **LÜDECKE** temperature regulation product range can be extended with various features and thus be ideally adapted to the respective requirement.

Security Lock

In addition to the TempSecure by **LÜDECKE**® series, we offer a simplified security lock.

- Disconnection only possible when safety pin engaged correctly into sleeve notch
- Prevention of fluid or pressure loss in the circulation during operation
- Prevention of human injury and harm to the environment, machine and tool
- Available for the series ESHM, ESHME, ESH, ESHE as well as ESDM and ESD

Just add "S" on Type No. (e.g. ESHM 9 TLS)
Surcharge: 2.19 Euro gross/piece

360° Rotatable Connector

The hose barb and male thread couplings of the series ESHM and ESH are also available with a rotatable connector, consisting of a high-quality ball-and-socket joint with double O-ring sealing*.

- Swivel joint absorbs the pulling and rotary motion when opening and closing the tool in the machine and prevents the fast wearing and abrasion of the O-ring inside the coupling through the permanent turning of the plug
- Prevention of leaks in the temperature regulation circuit
- Reduces the danger of bending hoses on their way to the tool

Just add "DR" on Type No. (e.g. ESHM 9 TLABDR), minimum order 20 pieces/type
Surcharge: 5.01 Euro gross/piece

*Other coupling series on request

Anchoring Concept

On Request, we offer all couplings with quick-fit hose stem contour to use with quick-fit hoses.

- Safest clamping features (an additional clamp is not necessary). Provides a secure hold in combination with an absolute leakage-free sealing between fitting and hose
- No tools or hose clamps/ clips are necessary to assemble the hose!
- Coloured rings assure an easy and clear marking of unicoloured quick-fit hoses to distinguish the difference between heating or cooling circulations
- Suitable quick-fit hoses are available from various manufacturers and distributors
- Special versions or other sizes/ types on request
- Note the maximum permanent temperature of 100°C!

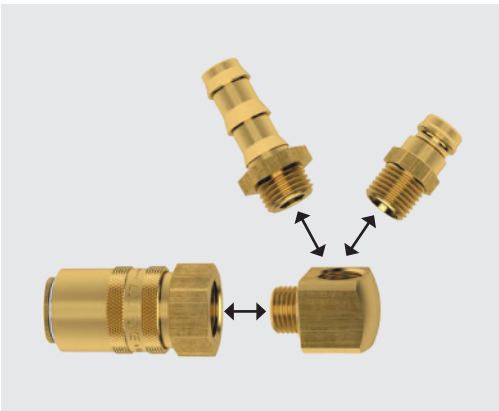

Modular System

For comprehensive flexibility, 45° and 90° elbow connectors are available which can be connected to threaded couplings and hose stems.

TempSecure by LÜDECKE®
Temperature Regulation Quick Connect Coupling System with Automatic Safety Locking Mechanism

The patented TempSecure by LÜDECKE® temperature regulation quick connect coupling system features an automatic safety locking mechanism which prevents unintentional disconnection and unlocking.

As a result, this coupling is especially suited when using aggressive media as well as for temperature regulation applications with hot or cold water and tempered oil between - 20°C and + 200°C*. Superior FKM O-rings make the coupling an ideal media carrier especially in high-temperature applications.

*subject to used media

Advantages:
- Maximum safety against unintended disconnection and unlocking
- Simple and intuitive coupling process
- High-temperature seals for best performance
- Versions with additional O-ring sealing at connection port to prevent leakage in high-temperature applications
- Available for almost all LÜDECKE temperature regulation series in various sizes, materials, connection and valve types

High-Quality Materials Guarantee Best Reliability

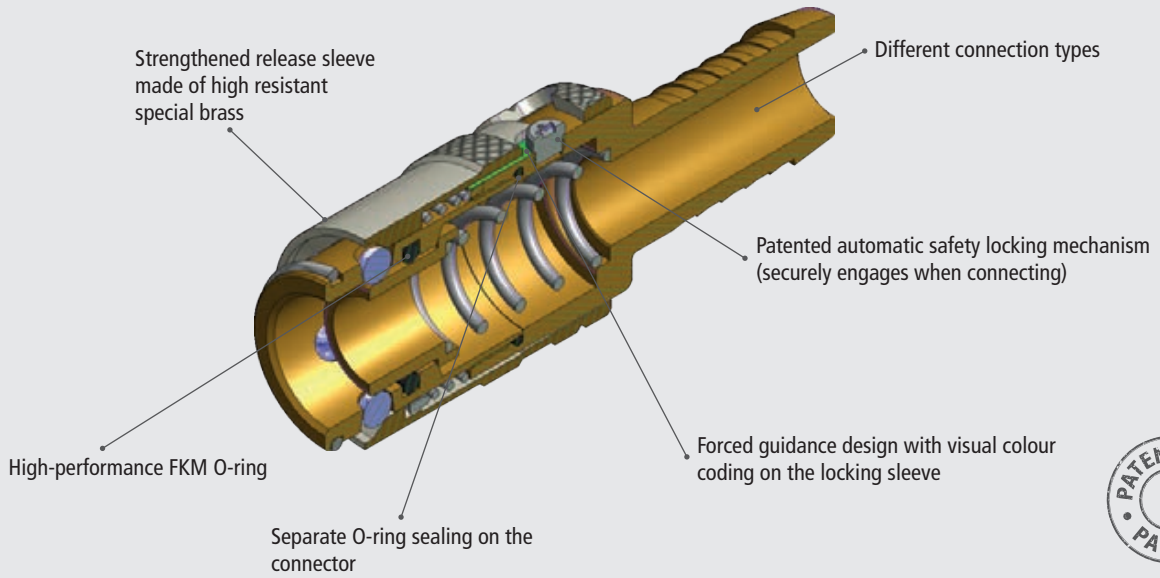

Easy - Reliable - Quick

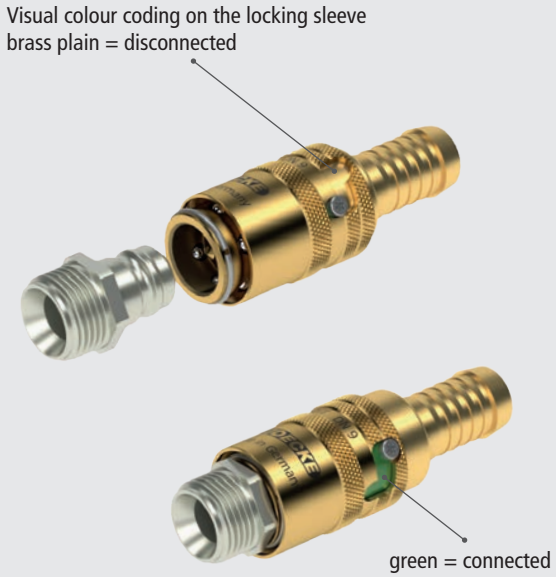

The TempSecure by **LÜDECKE**® temperature regulation quick connect coupling system is characterized by its simple and intuitive connecting process. Even under difficult circumstances and obstructed view, this enables safe operation.

The connection is made via automatic locking.
An additional colour coding on the locking sleeve clearly indicates correct and secure connection.

The disconnecting process can be performed blindly due to the forced guidance of the locking sleeve. However, this requires a deliberate manual unlocking effort. An accidental or unintentional disconnection is almost impossible.

Functional Principle:

Coupling with one-hand operation - To connect the system, simply push the plug into the safety coupling. The release sleeve automatically slides forward in a twisting motion and engages into the final safety lock position.
The coupling is now firmly connected to the plug and secured against unintentional opening.

To release the plug from the safety coupling, the sleeve has to be pulled back manually and with force. The plug can only be removed from the safety coupling by deliberately pulling/ twisting.

The TempSecure coupling is especially suited for applications which require high levels of safety due to the media used and their high temperature.

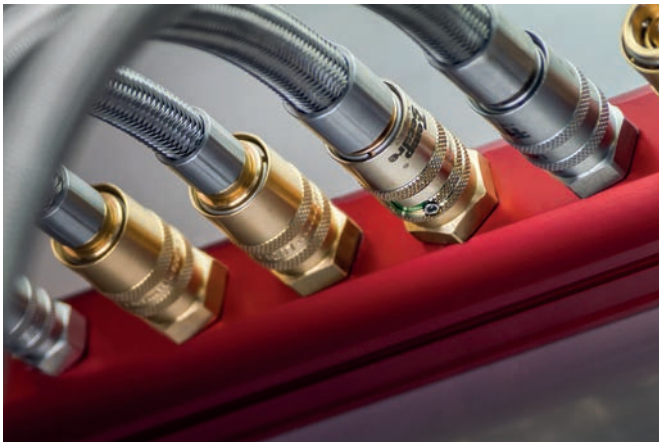

The reliable partner for temperature regulation applications

Accidentally decoupled and unlocked?
Not with the TempSecure by **LÜDECKE**® product range:
Effective protection against injuries and production downtimes.

Seals
for Temperature Regulation Quick Connect Couplings

FKM:

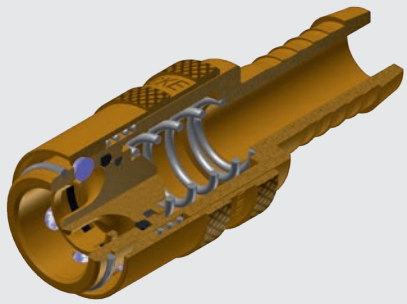

LÜDECKE offers high-resistant seals made of FKM for temperature regulation applications.

Advantages:
- Heat resistant up to 200°C (oil: 200°C, water: 150°C, air: 200°C)
- Highly resistant against all common tempered media
- Significantly better gliding properties and minimum wear (low adhesive tendency)
- High elasticity (no crack formation) according to DIN 53504
- High abrasion resistance of the O-ring
- Significantly increased life times of couplings

High-Performance FKM

The temperature regulation couplings of the TempSecure by **LÜDECKE**® series contain a high-performance FKM sealing ring which has been developed for the special requirements of high-temperature applications.

- Extreme heat resistance up to 220°C continuous temperature (oil: 220°C, water: 180°C, air: 220°C)
- High resistance against synthetic oils used as tempered media
- Very good chemical resistance and high resistance against aliphatic hydrocarbons (fuels)
- Steam/ hot water optimised

On request, the high-performance FKM sealing ring is also available for other temperature regulation couplings (For easy identification, the coupling sleeve is marked with a green anodized aluminium ring).
Surcharge: 3.75 Euro gross/ piece - When ordering. simply add "HV" to the standard article number (e.g. ESHM 9 TLABHV).

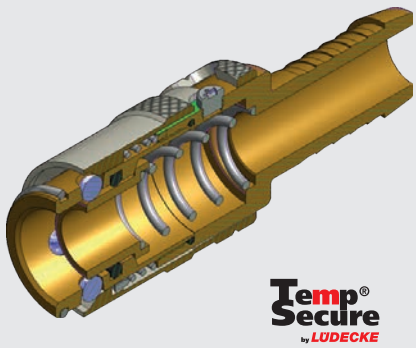

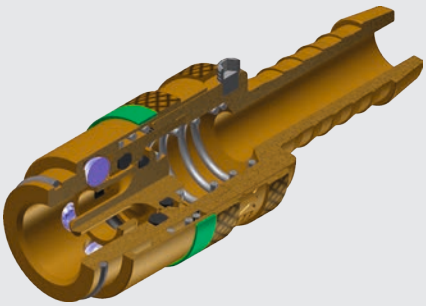

Other special seals (e.g. EPDM, FFKM) on request.

Overview of Quick Connect Couplings with

Temp Secure by LÜDECKE

Series	ESHMC DN 2.7	ESHM DN 6	ESHMT DN 6
Plug Profile (original size)		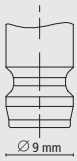	

Materials:			
Body:	MS 58 plain	MS 58 plain	MS 58 plain
Sleeve*:	MS 58 (plain/ nickel-plated)	MS 58 (plain/ nickel-plated)	Special Brass (plain/ nickel-plated)
Valve Body:	MS 58 plain	MS 58 plain	MS 58 plain
Valve:	MS 58 plain	MS 58 plain	MS 58 plain
Springs, Retaining Ring:	Stainless Steel 1.4310	Stainless Steel 1.4310	Stainless Steel 1.4310
Balls:	Stainless Steel 1.3541	Stainless Steel 1.4034	Stainless Steel 1.4034
Seals:	FKM	FKM	High-Performance FKM
Special seals for other media on request:	EPDM, FFKM	EPDM, FFKM	EPDM, FFKM
Plug:	MS 58 plain	MS 58 (plain/ nickel-plated)	MS 58 (plain/ nickel-plated)
Max. Working Pressure:	PN 15 bar	PN 15 bar	PN 15 bar
Temperature:	-20°C– +200°C**	-20°C– +200°C**	-20°C– +220°C***
Thread Types:	DIN 13/ DIN 158	ISO 228/ DIN 13/ DIN 158	ISO 228/ DIN 13
Flow Rate:	see chart p. 140	see chart p. 140	see chart p. 140
Connection:	straight/ 45°/ 90°	straight/ 45°/ 90°	straight/ 45°/ 90°
Type of Valve:	single/ double/ straight-through	single/ double/ straight-through	single/ double/ straight-through
Operation:	One-Hand	One-Hand	One-Hand
Page:	148	150	154

European Plug Profiles

ESH	ESHT	ESHG	ESHGT
DN 9	DN 9	DN 13	DN 13
			NEW!

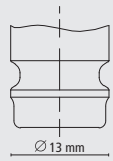

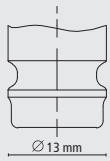

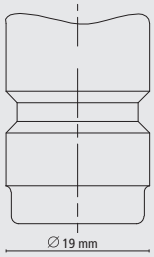

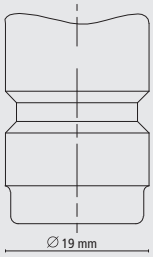

MS 58 plain	MS 58 plain	MS 58 plain	MS 58 plain
MS 58 (plain/ nickel-plated)	Special Brass (plain/ nickel-plated)	MS 58 (plain/ nickel-plated)	Special Brass (plain/ nickel-plated)
MS 58 plain	MS 58 plain	MS 58 plain	MS 58 plain
MS 58 plain	MS 58 plain	MS 58 plain	MS 58 plain
Stainless Steel 1.4310	Stainless Steel 1.4310	Stainless Steel 1.4310	Stainless Steel 1.4310
Stainless Steel 1.4034	Stainless Steel 1.4034	Stainless Steel 1.4034	Stainless Steel 1.4034
FKM	High-Performance FKM	FKM	High-Performance FKM
EPDM, FFKM	EPDM, FFKM	EPDM, FFKM	EPDM, FFKM
MS 58 (plain/ nickel-plated)	MS 58 (plain/ nickel-plated)	MS 58 plain	MS 58 (plain/ nickel-plated)
PN 15 bar	PN 15 bar	PN 15 bar	PN 15 bar
-20°C– +200°C**	-20°C– +220°C***	-20°C– +200°C**	-20°C– +220°C***
ISO 228/ DIN 13	ISO 228/ DIN 13	ISO 228/ DIN 13	ISO 228/ DIN 13
see chart p. 140	see chart p. 140	see chart p. 140	see chart p. 140
straight/ 45°/ 90°	straight/ 45°/ 90°	straight/ 45°/ 90°	straight/ 45°/ 90°
single/ double/ straight-through	single/ double/ straight-through	single/ double/ straight-through	single/ double/ straight-through
One-Hand	One-Hand	One-Hand	One-Hand
155	159	160	163

*couplings with shut-off valve: brass plain, couplings with straight-through valve: brass nickel-plated
**subject to media (oil: 200°C, water: 150°C, air: 200°C)
***subject to media (oil: 220°C, water: 180°C, air: 220°C)
Special Brass: high resistant special brass